Glow Fire

Hologramm 80

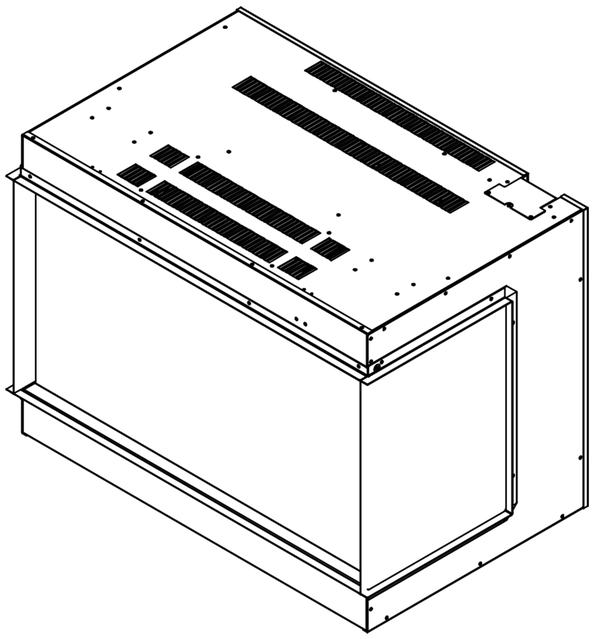

Front

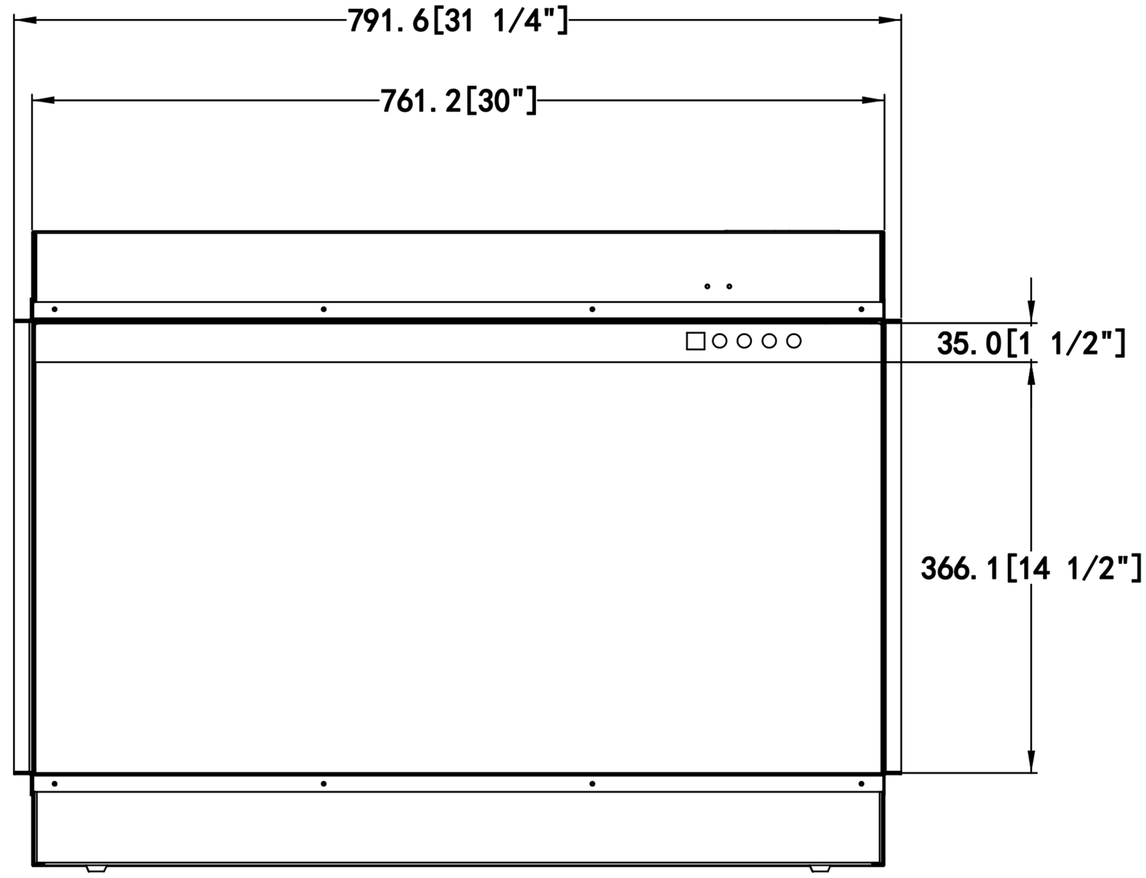

Side

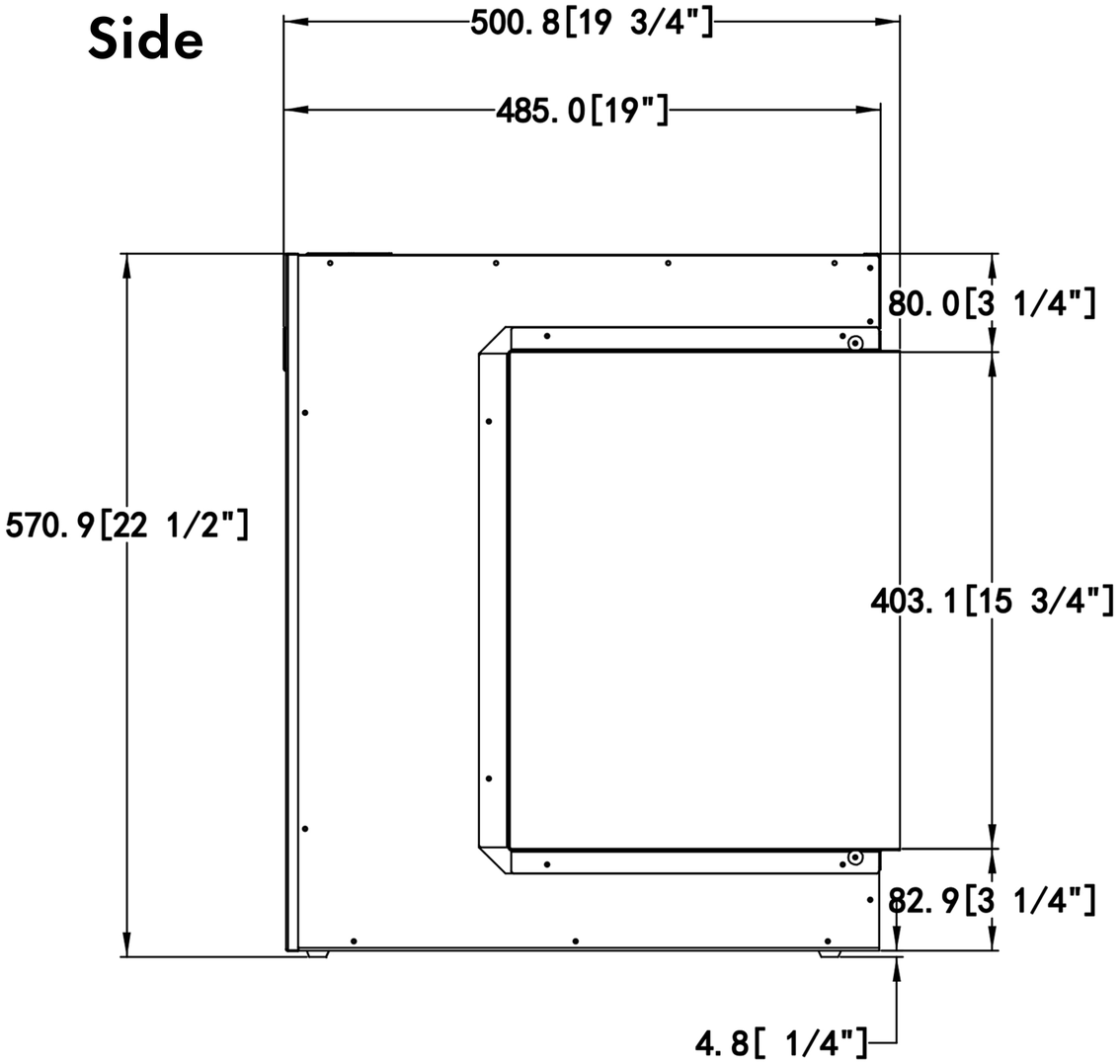
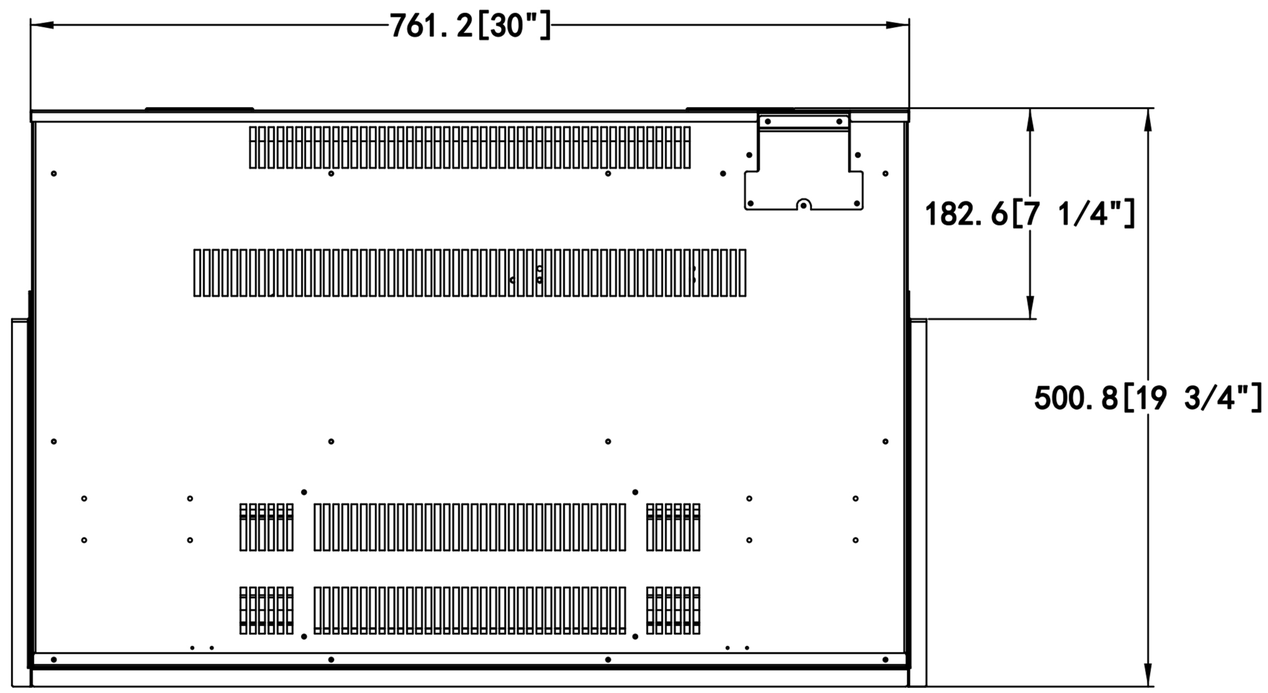
Back