Glow Fire

Hologramm 140

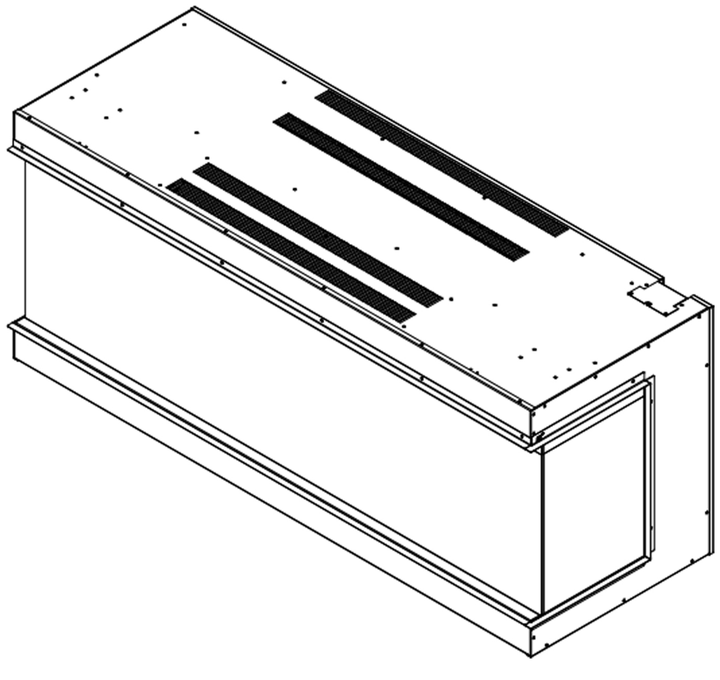

Front

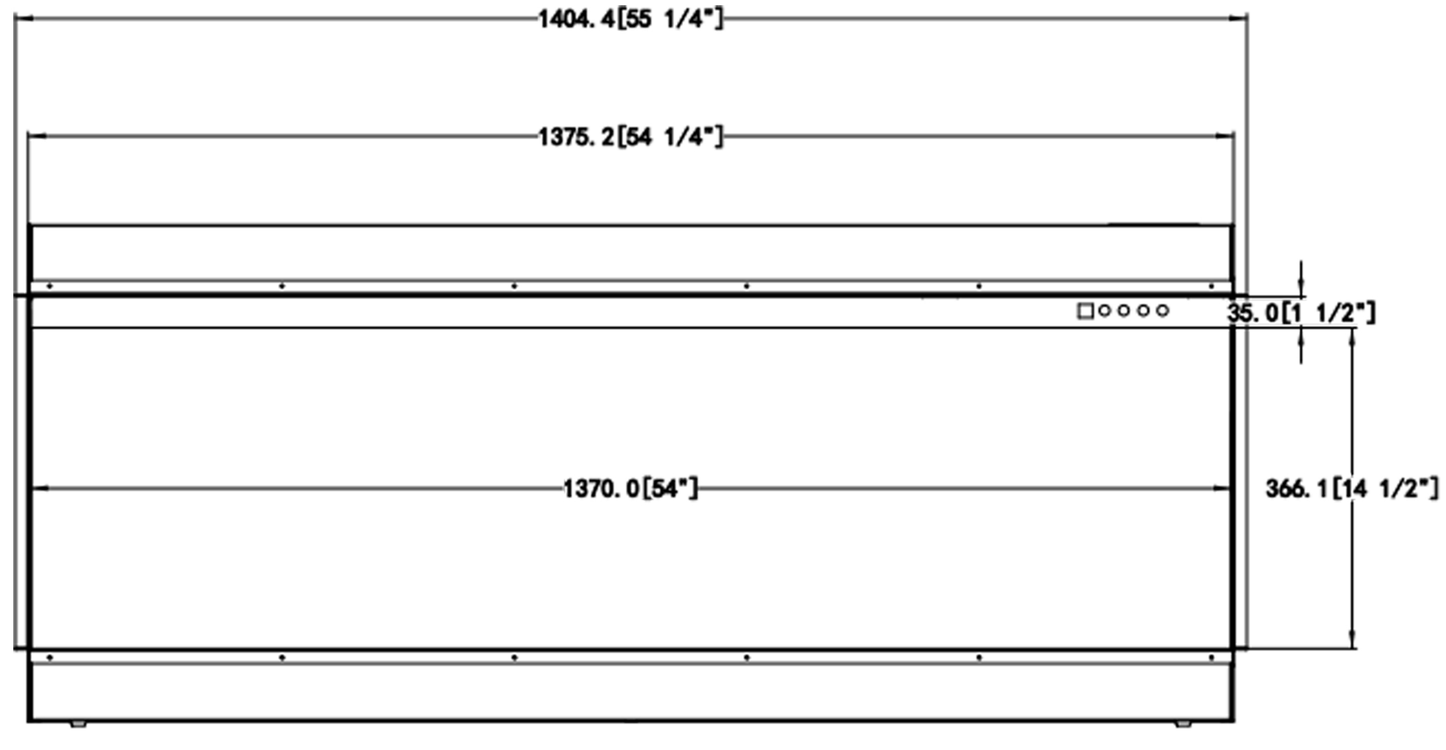

Side

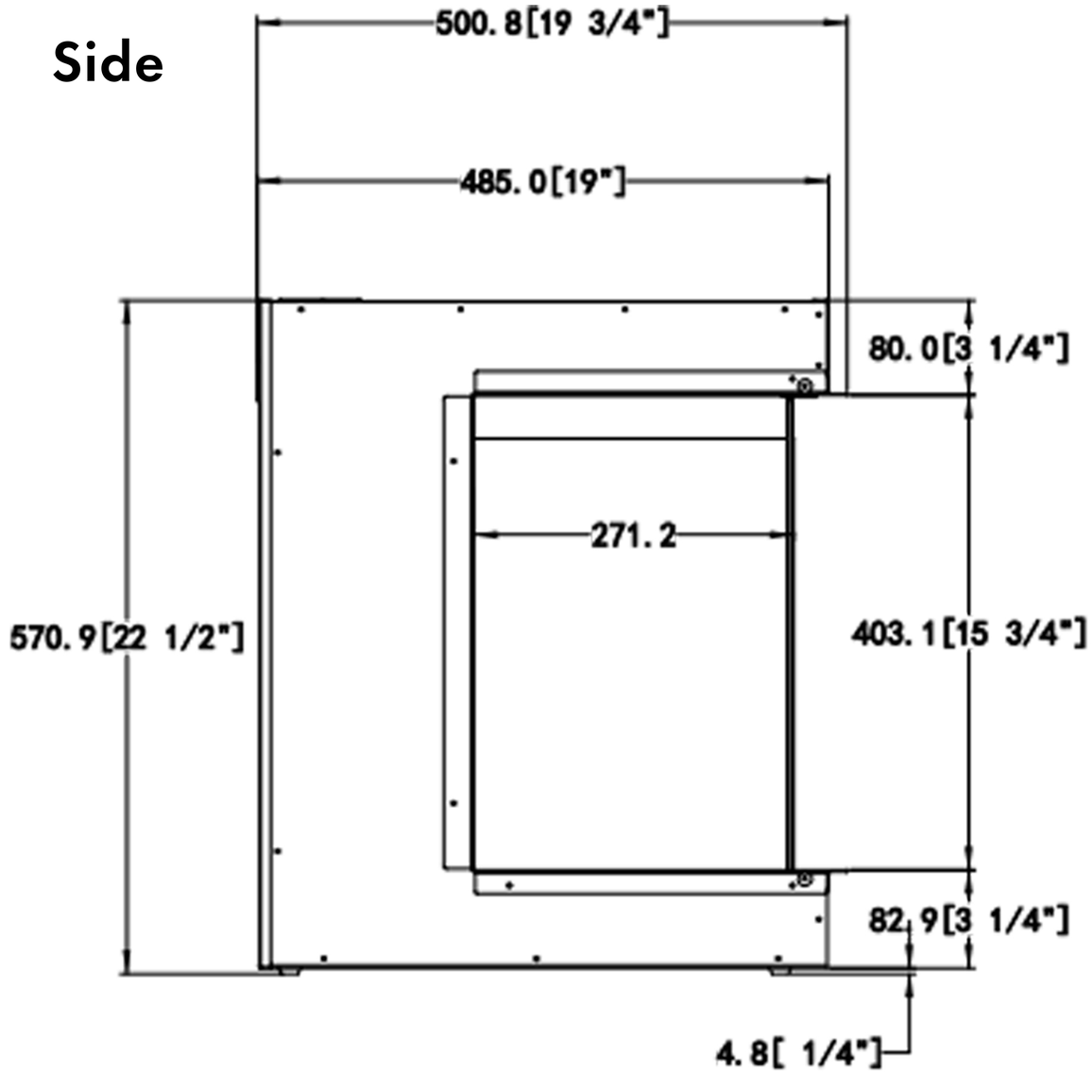
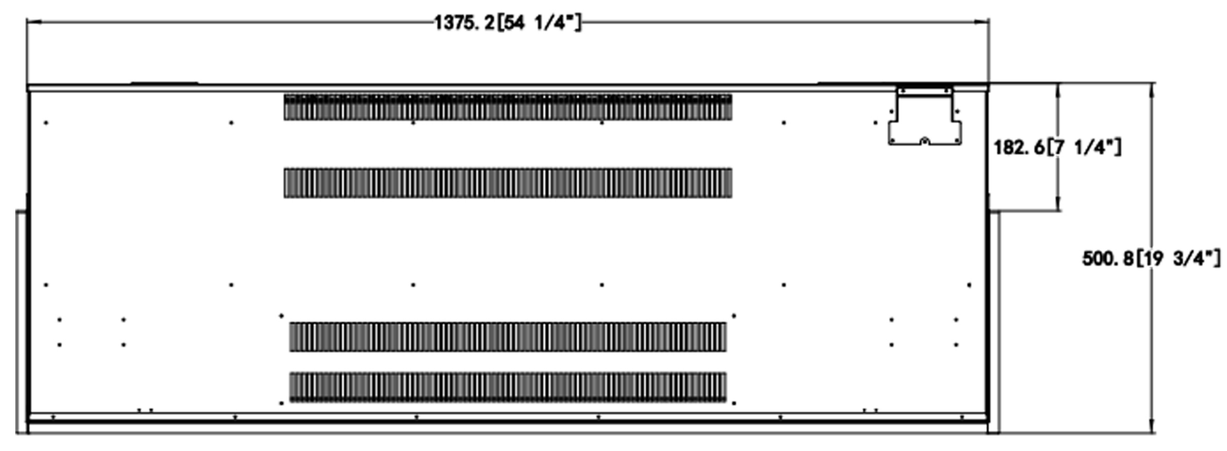
Back